User Manual & Installation Guide

Model: Hafele AXON

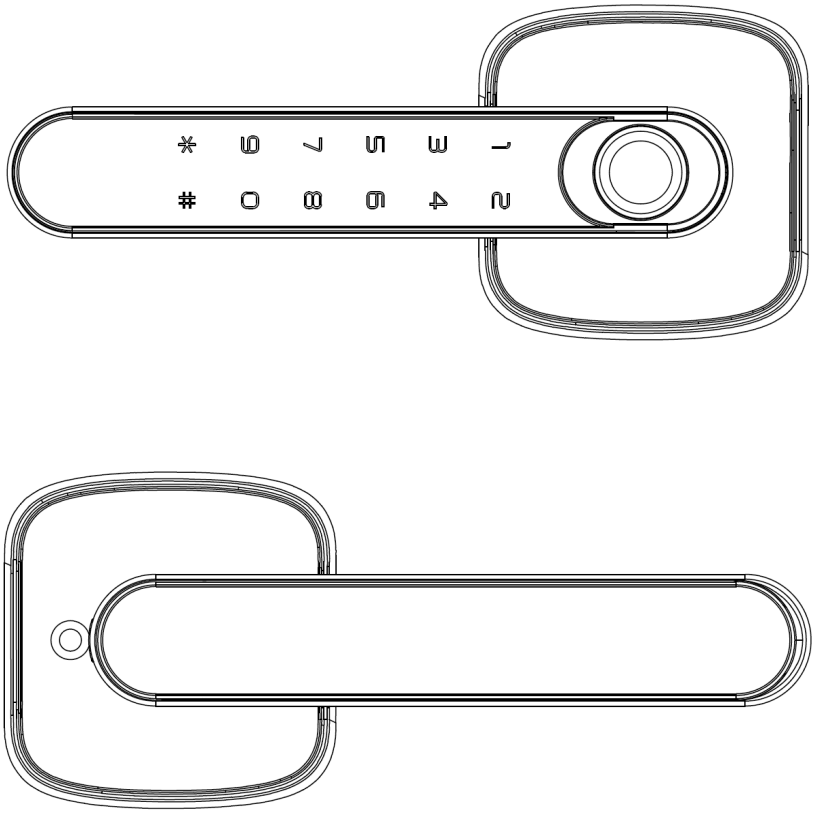

Disclaimer: The contents of this user manual are subject to change without prior notice to the user in order to enhance performance of the product.

Table of Contents

1 Read Before Use	Page
1.1 Warnings	4
1.2 Product Specifications	4
1.3 Additional Features	5
1.4 Product Overview	6

2 Installation Guide	Page
2.1 Product Components	7
2.2 Installation Steps	8-11

3 Settings	Page
3.1 Demo Mode	12
3.2 First Settings (Register Administrator)	12
3.3 Register User Fingerprint	13
3.4 Register User Password	13
3.5 Delete User Fingerprint	14
3.6 Delete User Password	14

4 Network Settings	Page
4.1 Hafele Smart Living App	15
4.2 Bluetooth App Features	15
4.3 Smartphone App Pairing	16
4.4 How to Use Smartphone App	17-19
4.5 Add User Data via App	20
4.6 Delete User Data via App	21

Table of Contents

5 Lock Operation	Page
5.1 Outdoor Unit Description	22
5.2 Indoor Unit Description	22
5.3 Door Locking Operation	22
5.4 Door Unlocking Operation	23
5.5 Passage Mode (Remain Unlocked Mode)	23

6 Service Features	Page
6.1 Emergency Power Supply	24
6.2 Battery Replacement Instructions	24
6.3 Restore Factory Settings	25
6.4 Troubleshooting Guide	26

1. Read Before Use

1.1 Warnings

1. Read and understand all instructions before use.
2. Do not expose the product and accessories to rain or direct sunlight.
3. When cleaning the product, please wipe it with a soft cloth.
4. Do not scrape the fingerprint sensor with any sharp objects.
5. If damage is caused by failure to follow this instructions, the warranty does not apply.
6. Make sure your fingers are clean and dry before using the fingerprint sensor. Dirt, oil and moisture can interfere with the recognition.
7. Do not expose the product to corrosive substances to avoid damage.
8. Only use the alkaline batteries, and it is not recommended to use special battery such as EVOLTA, etc.
9. If there is a low battery alert, please replace all the batteries in time and make sure they're properly installed.

1.2 Product Specifications

Features	
	Fingerprint
	Password
	Mechanical Key
	Bluetooth App
	Alkaline AAA Battery System
	USB-C Emergency Power
	ENG & CHI Voice Prompts

Basic Specification		
User Capacity	• 1 Admin, up to 19 User passwords. • 1 Admin, up to 19 User fingerprints. • 25 App Custom passwords.	
4 Unlocking Ways	Password, Fingerprint, Emergency Key and Smartphone App.	
Door Thickness	28 - 50 mm	
Door Frame Stile	≥ 100 mm	
Voice Guide Language	English and Chinese	
Power Supply	Alkaline Battery	4 x AAA size
	Emergency Power	5V, USB Type-C interface
	Operating Voltage	6V
Material	Lock panels	Aluminium alloy
	Bolt	Stainless steel
Working Environment	Temperature	-25 to +77 Degree Celsius
	Humidity	20%-90%
	Ingress protection	Outdoor unit: IP52 Indoor unit: IP52

1. Read Before Use

1.3 Additional Features

Locking Modes	
	**Auto-Locking** After unlocking, the system will automatically lock within 3–10 seconds; this specific duration must be configured via the App.
	**Passage Mode (Remain Unlocked)** In Passage Mode, anyone can unlock the door by simply pressing the handle down.

Security & Alarms	
	**Random Passcode** Random digits can be added before or after the passcode to hide your real code from other persons.
	**Low Battery Alarm** The lock will remind you to charge the battery with indicator light and voice prompt.

1. Read Before Use

1.4 Product Overview

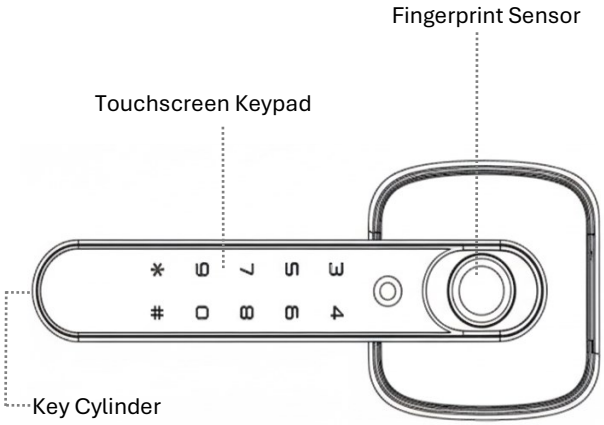

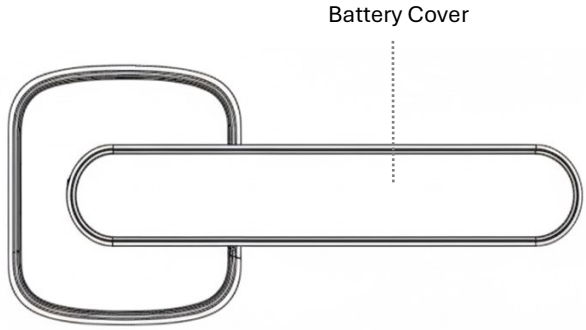

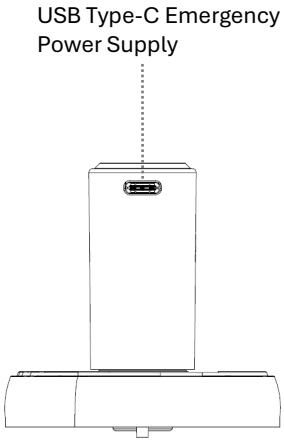

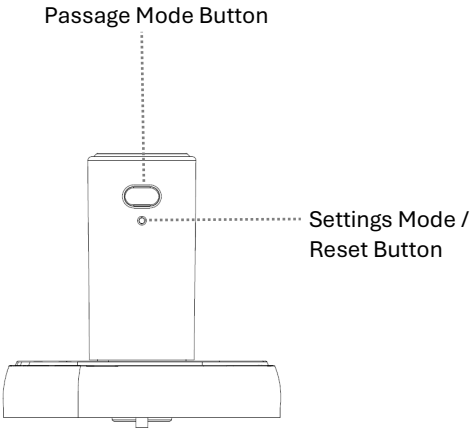

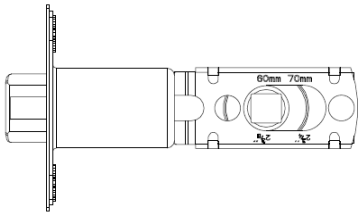

Tubular Latch

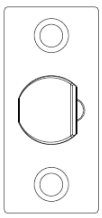

Strike Plate

Packing List	
Outdoor Unit	1 pc
Indoor Unit	1 pc
Tubular Latch	1 set
Strike Plate	1 set
Accessories Pack	1 set
Drilling Template	1 pc
Quick Start Guide	1 pc

2. Installation Guide

2.1 Product Components

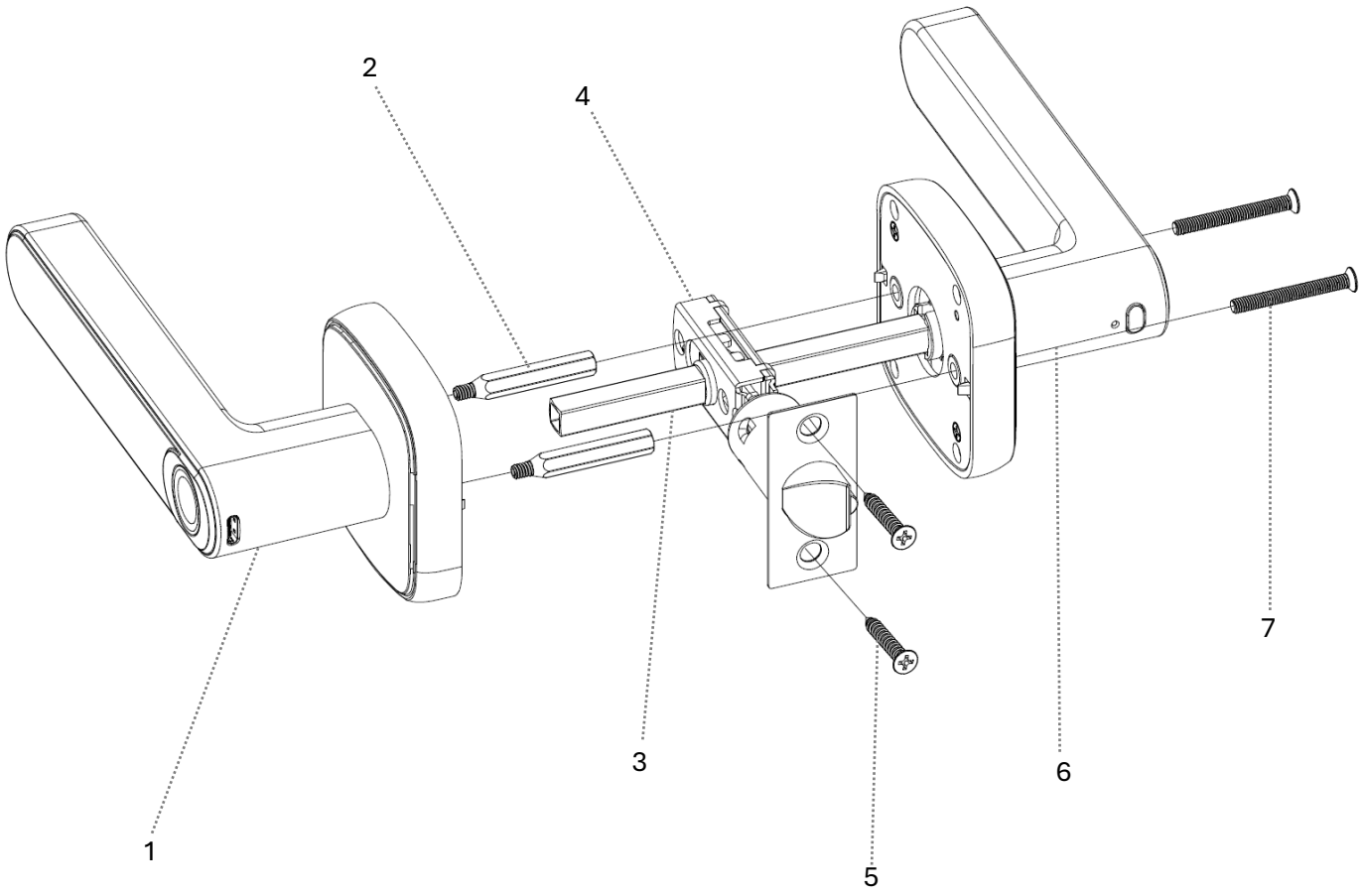

1. Outdoor Unit
2. Threaded Sleeve
3. Square Spindle
4. Tubular Latch
5. Self-tapping Screws
6. Indoor Unit
7. Fixing Screws

2. Installation Guide

2.2 Installation Steps

1. Adjust the tubular latch backset (60mm or 70mm) based on the distance from the door edge to the center of the hole.

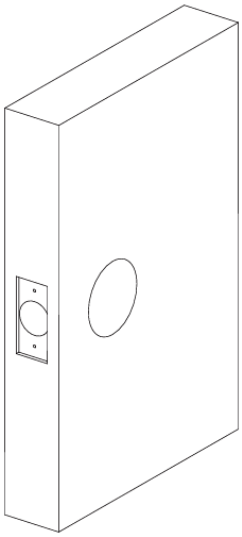

2. The default backset is 60mm. To adjust to 70mm, please follow these steps:

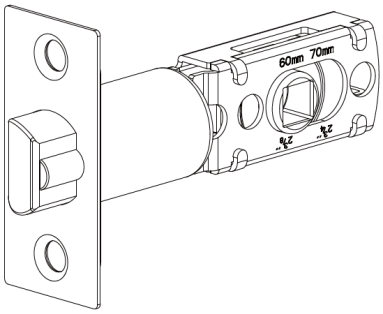

3. Pull out the extension part to reach the 70mm backset position.

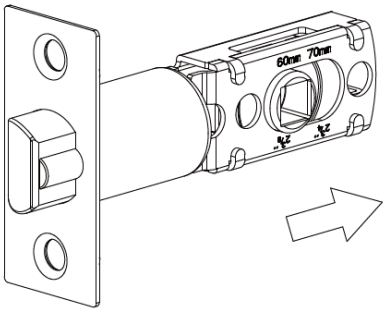

4. Insert the tubular latch into the door and secure it using 2 self-tapping screws.

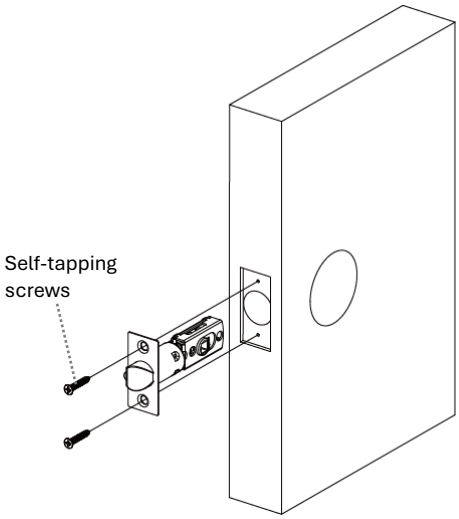

⚠ Caution:

- Ensure the slanted side of the latch bolt faces the door frame.
- Do not overtighten the screws during installation.

2. Installation Guide

2.2 Installation steps

5 Install 2 threaded sleeves onto the outdoor unit.

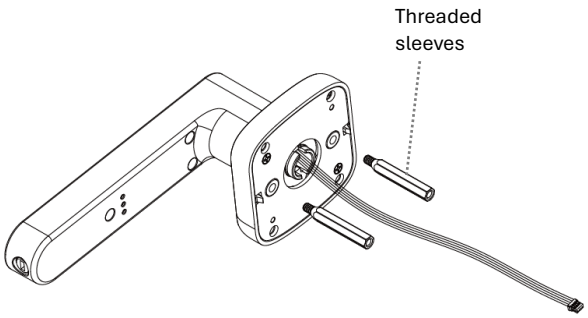

6 Thread the outdoor unit cable through the square spindle hole, then insert the square spindle.

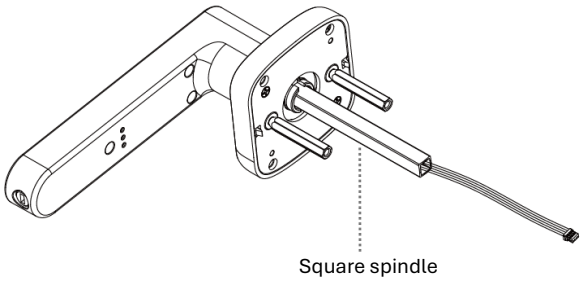

7 Gently lift and open the battery cover at the indoor unit.

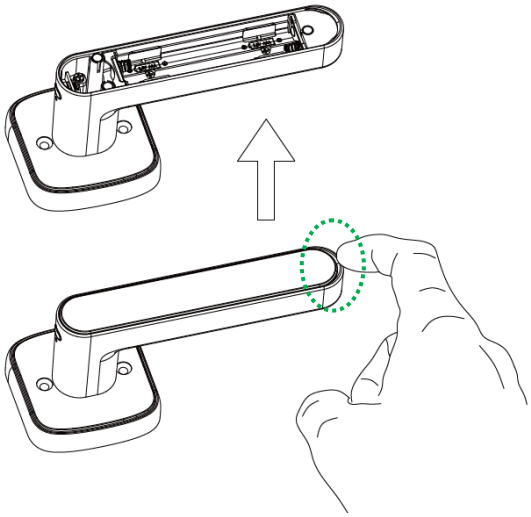

8 Pass the outdoor unit cable and square spindle through the tubular latch.

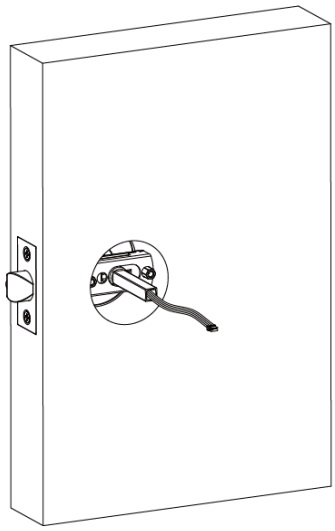

⚠ Caution:

- Ensure the cable is not pinched or kinked during installation to prevent internal damage.
- Ensure the square spindle is fully inserted and centered through the tubular latch.

2. Installation Guide

2.2 Installation Steps

9 Thread the cable from the outdoor unit through the cable hole on the indoor unit.

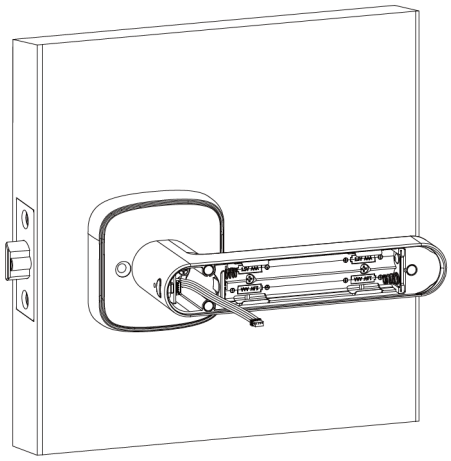

10 Plug the cable into the corresponding socket on the indoor unit.

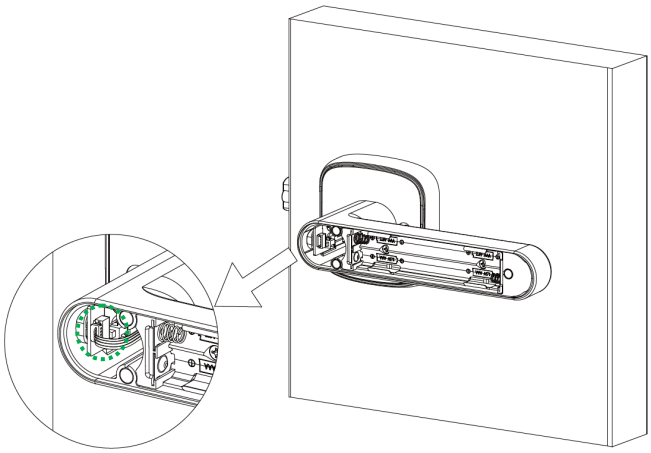

11 Secure the indoor and outdoor units by installing the top screw first (do not tighten fully yet).

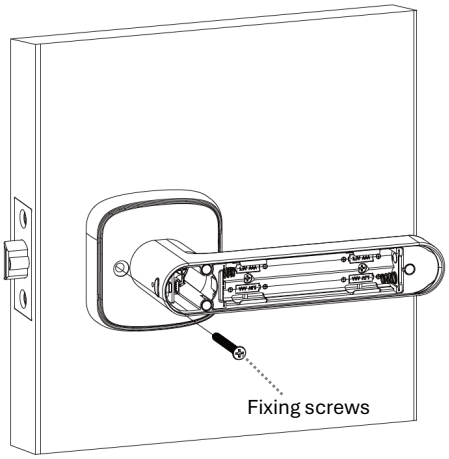

12 Align the indoor unit to be perfectly vertical, then install the bottom screw and tighten both securely.

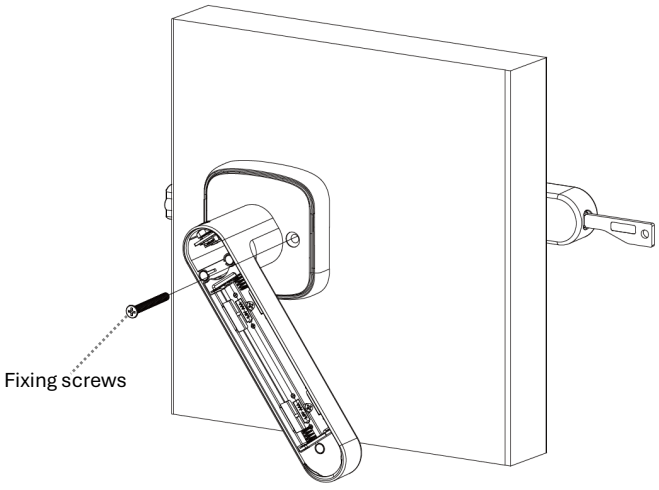

⚠ Caution:

- Ensure the cable is neatly tucked into the internal cavity and is not pinched or kinked when tightening the screws.

2. Installation Guide

2.2 Installation steps

13 Install 4 x 1.5V AAA Alkaline batteries into the battery compartment, then replace the battery cover.

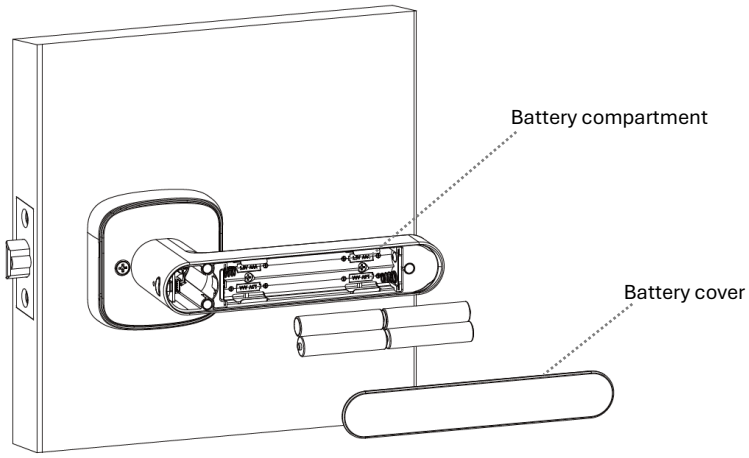

14 Install the strike box and strike plate onto the door frame, then secure them with 2 self-tapping screws.

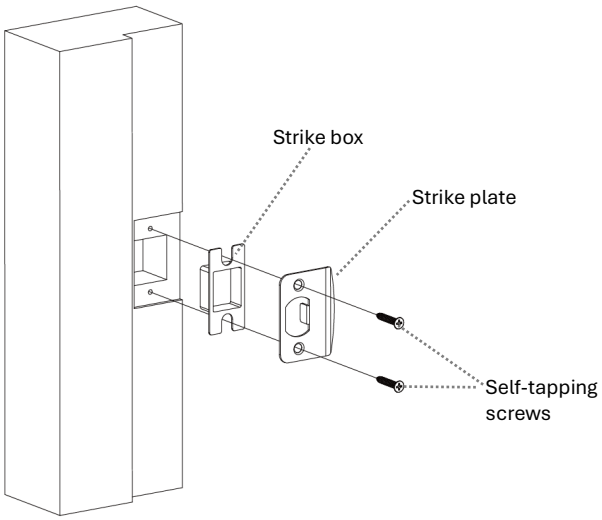

Note: The installation is now finished. After inserting the battery, the lock should power on. Please proceed with lock settings.

Caution: After first start-up the lock is in **Demo Mode**. Any fingerprint or factory default admin password 123456 can open the door.

3. Settings

3.1 Demo Mode

Demo Mode (First use or after reset to factory settings)

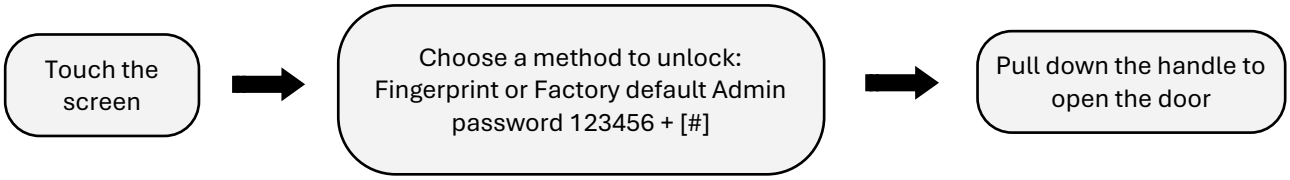

⚠ Caution:

- In demo mode, any fingerprint or factory default Admin password 123456 can open the door.

3.2 First Settings (Register Administrator)

⚠ **Important: Choice of Setup Sequence**

- **Option A: App-First Connection**
  If the App is paired before local registration, all future settings must be managed exclusively via the App. Manual setup on the lock will be disabled until a Factory Reset is performed.

- **Option B: Device-First Setup (Recommended)**
  You may register an Administrator locally on the device first. Please follow the steps below:

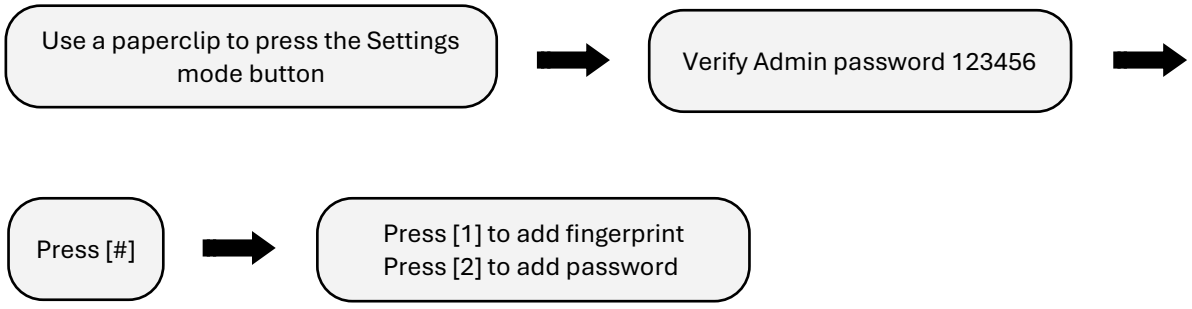

⚠ Caution:

- The first fingerprint or password registered will be automatically assigned as the Administrator and designated as User ID 1.
- Once a new administrator is added, the default Admin password "123456" will be automatically deactivated.

ⓘ Note:

- Make sure your fingers are clean and dry before using the fingerprint sensor. Dirt, oil and moisture can interfere with the recognition.
- You can exit the settings mode at any time by pressing the "*" key.

3. Settings

3.3 Register User Fingerprint

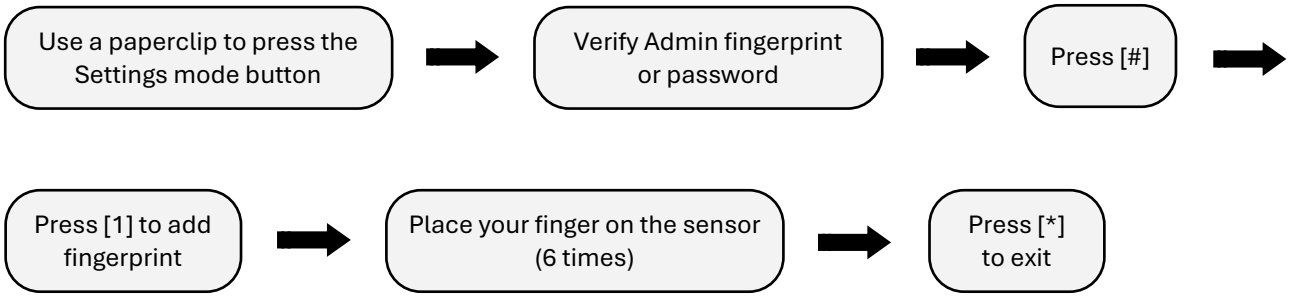

Important:
- Up to 20 User fingerprints can be registered.
- Subsequent fingerprints will be assigned User IDs 2–20 in the order of registration.
- The system does not support duplicate fingerprint registration.

Note:
- Make sure your fingers are clean and dry before using the fingerprint sensor. Dirt, oil and moisture can interfere with the recognition.
- You can exit the settings mode at any time by pressing the "*" key.

3.4 Register User Password

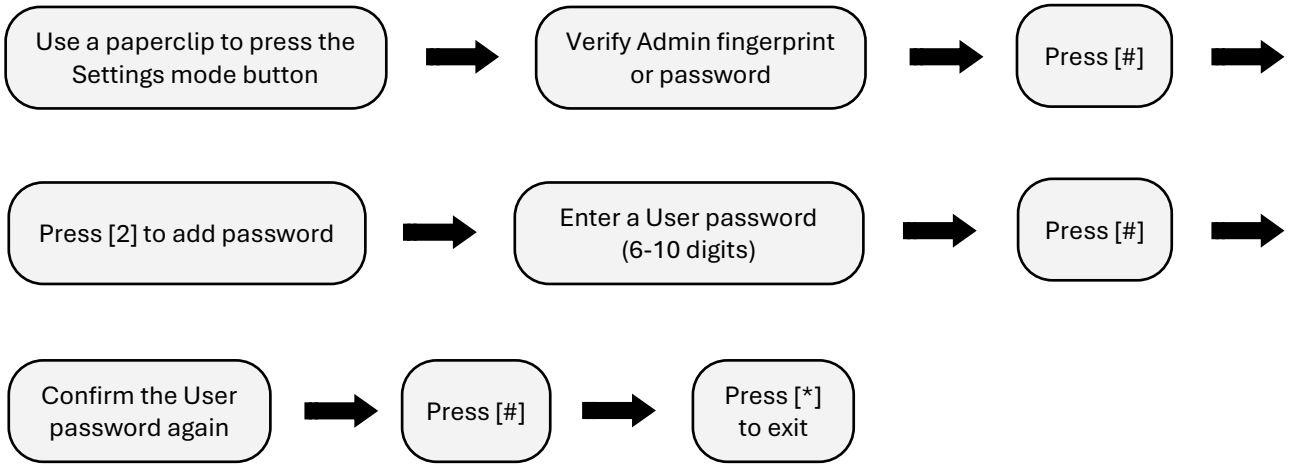

Important:
- Up to 20 User passwords can be registered.
- Subsequent passwords will be assigned User IDs 2–20 in the order of registration.
- The system does not support duplicate password registration.

Note:
- You can exit the settings mode at any time by pressing the "*" key.

3. Settings

3.5 Delete User Fingerprint

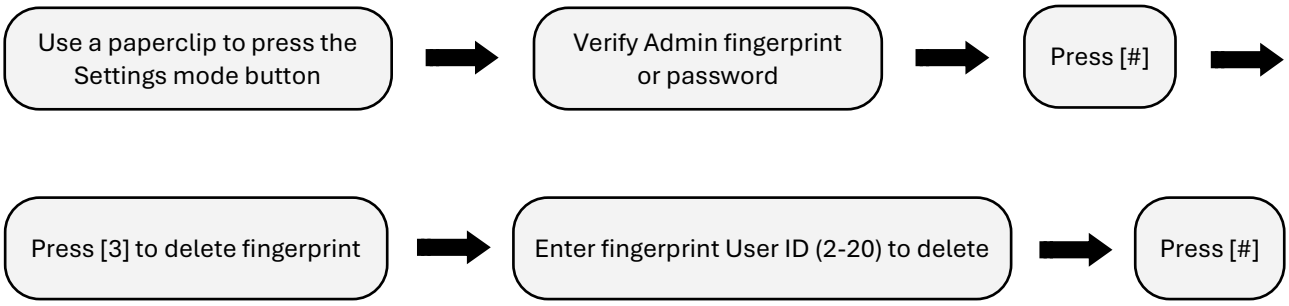

Important:

- You must know the specific User ID (2–20) assigned during registration to delete a fingerprint.
- User ID 1 is the Administrator and cannot be deleted by this process.
- A Factory Reset is required to delete the Administrator (ID 1).

Note:

- You can exit the settings mode at any time by pressing the "*" key.

3.6 Delete User Password

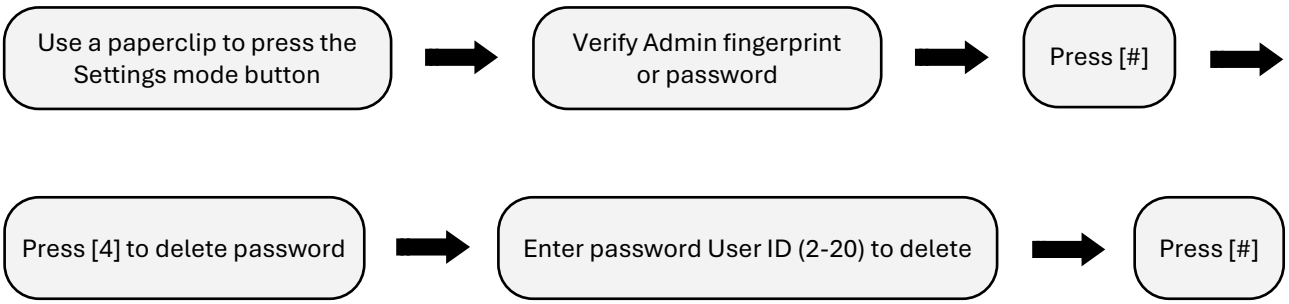

Important:

- You must know the specific User ID (2–20) assigned during registration to delete a password.
- User ID 1 is the Administrator and cannot be deleted by this process.
- A Factory Reset is required to delete the Administrator (ID 1).

Note:

- You can exit the settings mode at any time by pressing the "*" key.

4. Network Settings

4.1 Hafele Smart Living App

Hafele Smart Living App features



App Remote unlock
The Hafele Smart Living App allows you to unlock your door from anywhere in the world (a Multimode Gateway is required). You may also share this access permission with other family members registered on the App.

Member Management
You can fully manage all Family and other Members access credentials. The smartphone App allows you to add/delete Users Fingerprints and Passwords.

Temporary Code
You can create Custom password with limited time plans from anywhere when the lock is active and on-line with a gateway. Additionally the App also offers a password generator for offline use. This is useful if you allow someone temporary access to your door.

Lock Settings
In the App you can also enable/disable Remote Unlock, Auto Lock modes, as well as customize the Auto Lock Duration, Voice Language and Volume levels.

⚠ Important: Extensive use of App features and/or connecting a Wireless multimode gateway will reduce the battery life.

4.2 Important Information - Bluetooth App Features

Thank you for purchasing a Hafele Digital Door Lock.

For full functionality, this lock is designed to use a Bluetooth connection to your smartphone. Yet Bluetooth has only a range of 5-10 meters. Therefore if you require remote unlock and real-time access to your lock from anywhere, you will need to purchase the optional Wi-Fi multimode gateway; item code 499.21.220. For more information please contact your local Hafele offices.

4. Network Settings

4.3 Smartphone App Pairing

⚠ Important: The first step is to set an Administrator before pairing the lock to the Hafele Smart Living application. See page 12 - 3.2

A. Built-in Bluetooth module settings / Smartphone App Pairing

1. Download "Hafele Smart Living" application from Apple Store or Google Play.



2. Sign up App's account by email or log in if you already have an account.
3. Enable Bluetooth on your smartphone.
4. Enable lock pairing mode.

Use a paperclip to press the Settings mode button → Verify Admin fingerprint or password and press [#] → Press [5] to connect Bluetooth device

5. Click "Add device" in the top right corner of the App, the next screen will show any available lock on the top with an "Add" icon.
6. Click "Add" to start the process, then click "Done" to finish the pairing process.
7. You can now manage users and lock settings with your smartphone application.

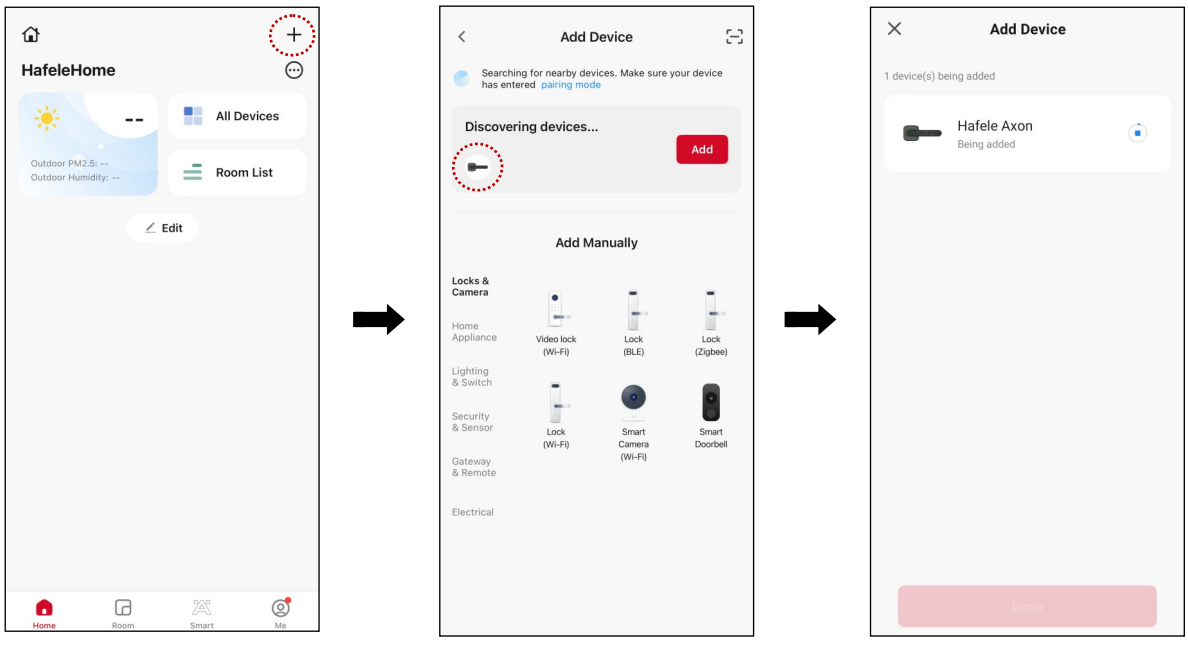

4. Network Settings

4.4 How to Use Smartphone App

1. Main Screen

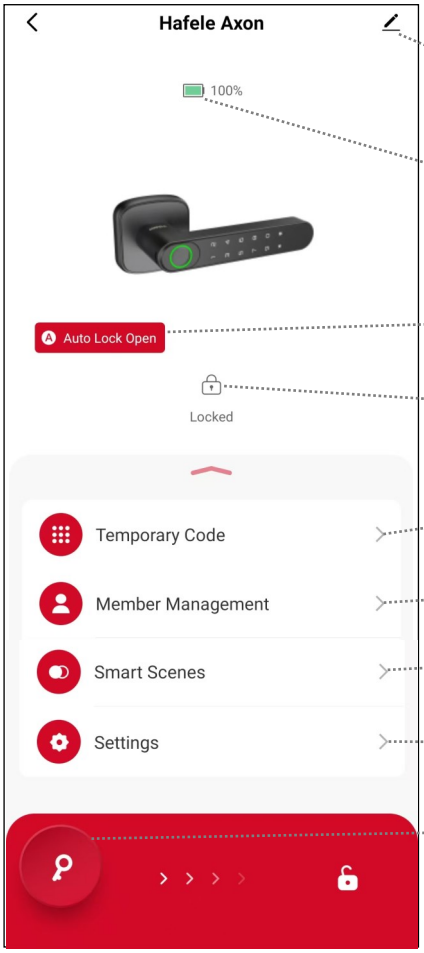

1. Lock name - click to change
2. Battery Status
3. Auto Lock Status
4. Lock Status
5. Temporary Code Management
6. User Management
7. Smart Scenes (Home Automation Options)
8. Lock Settings
9. App Unlock Button

2. More Settings

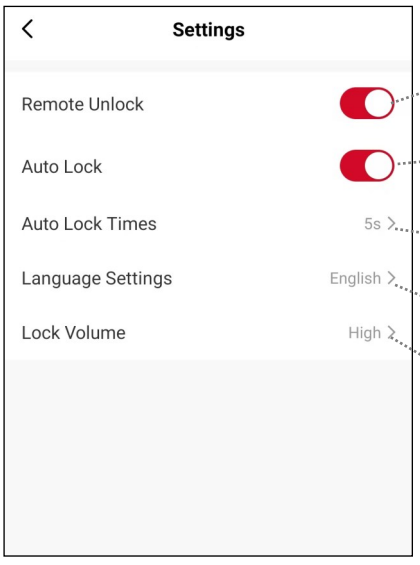

1. **Remote App Unlock Permission**
   App unlock can be disabled or limited to administrators only.
2. **Auto Lock Mode**
   When the door is closed, it will be locked automatically.
3. **Auto Lock Duration**
   The locking time can be customized from 3–10 seconds via the App.
4. **Voice Language**
   Adjust the lock language English or Chinese.
5. **Volume Levels**
   Adjust the lock volume Mute, Low, Normal or High.

4. Network Settings

4.4 How to Use Smartphone App

3. Locally Added Users

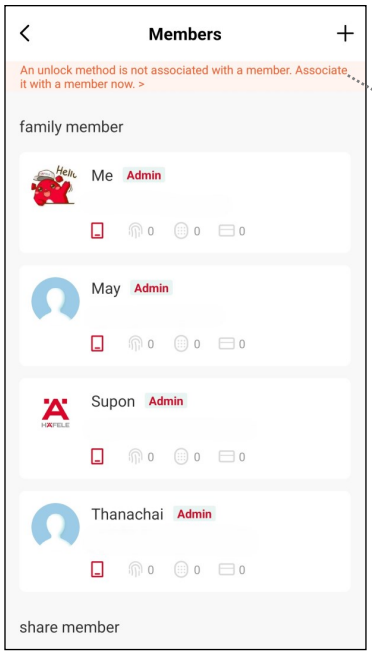

Local Users from the lock's memory
This message appears, for users added via the locks local menu (not the App).

Click this message to see the screen on the right to assign them to App Users.

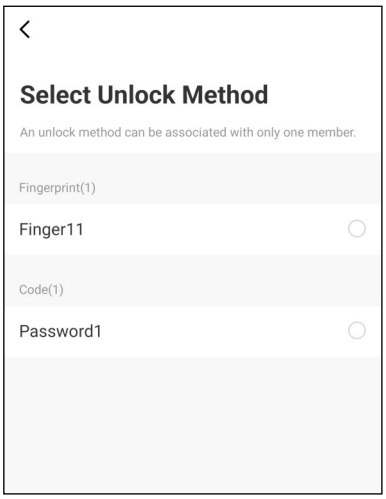

4. Member Management

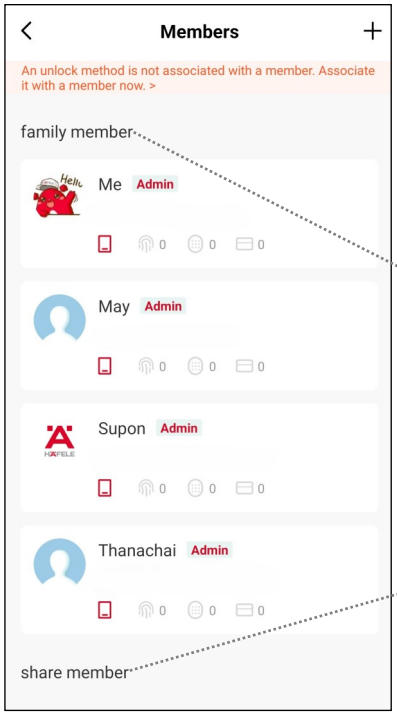

Member Management
Here you can add/remove and manage all user access credentials for your lock. Select to see the screen on the right.

a.) Family Member
These are the App users you share your "Home" and all smart home devices, that includes this lock. Users need to sign-up with an App account to be added.
To set permissions or remove, use "Member Management" of the main App.

b.) Share Member
Other App users you share access for this lock.

4. Network Settings

4.4 How to Use Smartphone App

5. Temporary Code

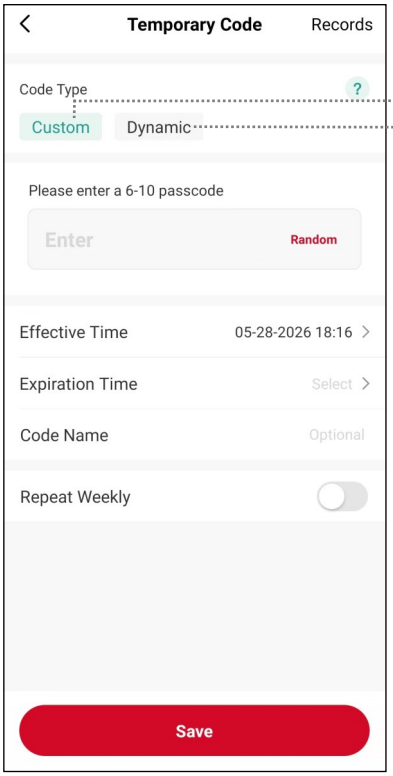

1. Custom Code (online)

- You can define the passcode digits and set a name for the code by yourself.
- The lock must be active and connected to the APP in order to transfer this code to the locks memory.
- You can check if the code has been successfully transferred by clicking "Records"

2. Dynamic Code (offline)

This code can be created offline and the system automatically assign the digits. The lock will recognize their validity with and an algorithm.

Table Comparison of Code

Type	Must connect to App	How to activate the Code	How to Delete the Code before it expires
Custom	Yes	Unnecessary	After the App connects to the door lock,delete it through the App
Dynamic	No	Unnecessary	Expires automatically unavailable

4. Network Settings

4.5 Add User Data via App

Add Users via Smartphone App.

1. Turn on your phone's Bluetooth and choose Axon lock in the Hafele Smart Living App.

2. Tap "Member Management", then select the desired User account.

3. Choose the type of access to add (Fingerprint or Password) and follow the on-screen instructions.

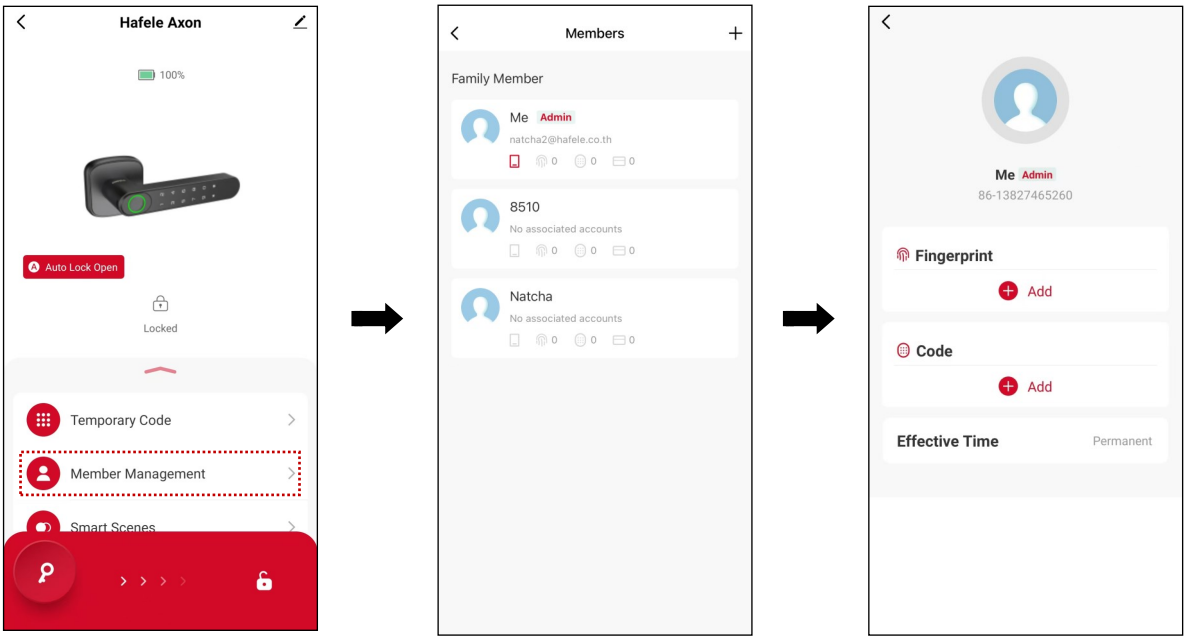

Note:

- Make sure you are within the lock's Bluetooth range .
- The user added through this process will be a permanent user.
- Make sure your fingers are clean and dry before using the fingerprint reader. Dirt, oil and moisture can interfere with the recognition.

4. Network Settings

4.6 Delete User Data via App

Delete User via Smartphone App

Follow the steps below to complete the process:

1. Turn on your phone's Bluetooth and open the Hafele Smart Living App.

2. Tap the "Member Management" icon, then select the desired user account.

3. Choose the access type to delete (Fingerprint or Password) and tap "Delete".

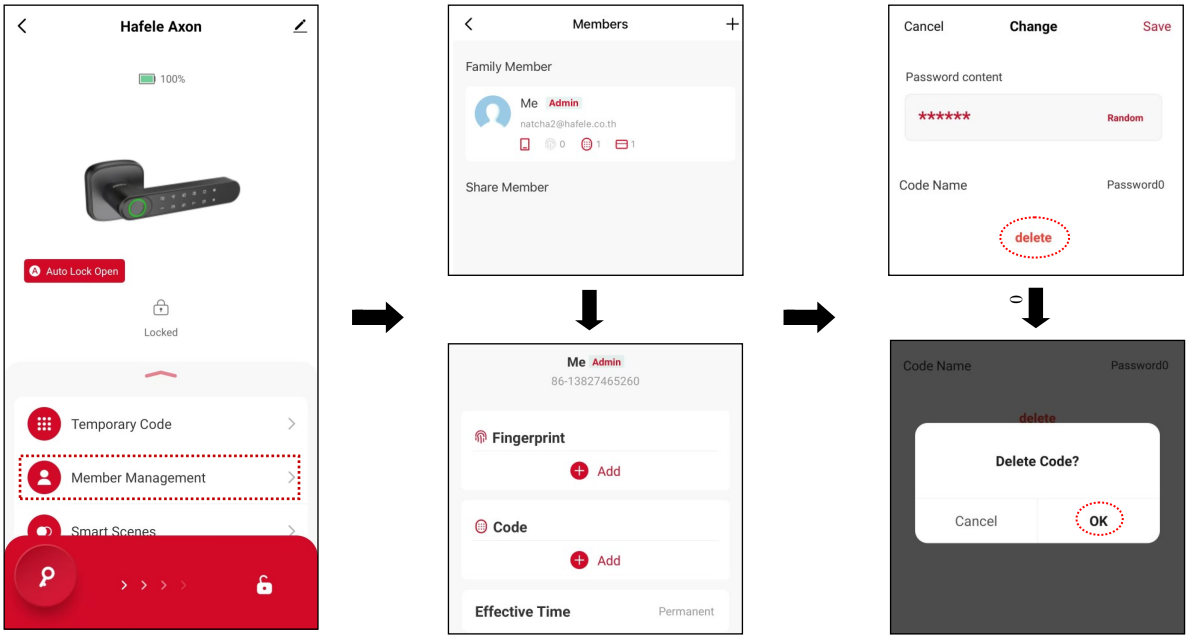

Note:

- Make sure you are within the lock's Bluetooth range.
- Deleting a user on the App will permanently remove their access from the lock.

5. Lock Operation

5.1 Outdoor Unit Description

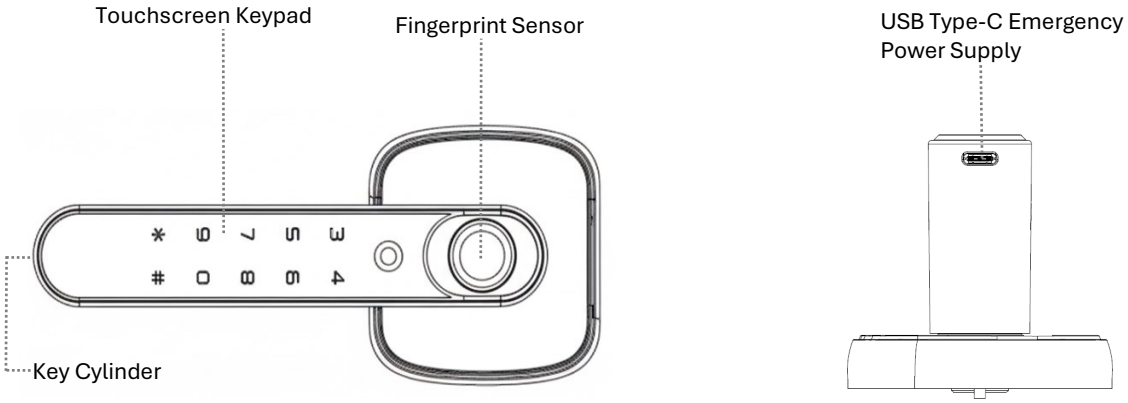

5.2 Indoor Unit Description

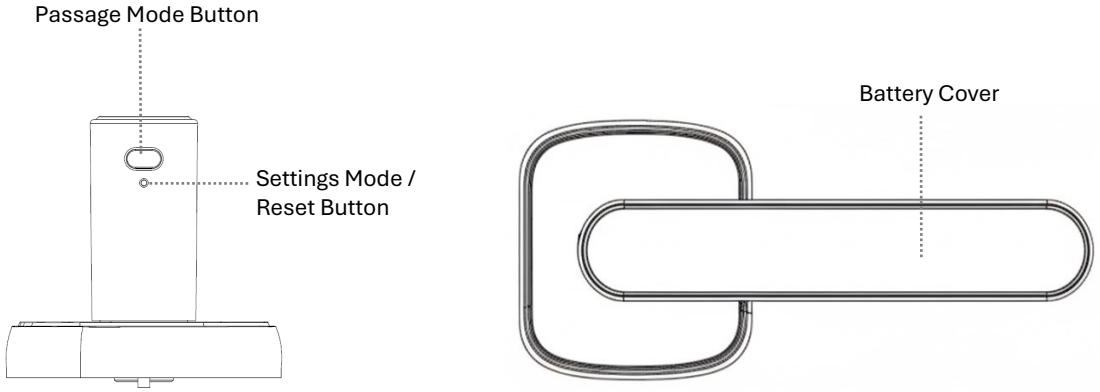

5.3 Door Locking Operation

Locking the Door

A: Auto-Lock Mode:

⇒ The door will automatically lock within 3 to 10 seconds after being unlocked.

B: Passage Mode:

⇒ After closing, the lock will remain in the "Unlocked" status, allowing the door to be opened at any time.

5. Lock Operation

5.4 Door Unlocking Operation

Unlocking the Door

A: Auto-Lock Mode:

⇒ **Fingerprint:** Place a registered finger on the fingerprint sensor.

⇒ **Password:** Touch the keypad to wake up the lock, enter a 6-10 digit password, and press [#] to confirm.

⇒ **Mechanical Key:** Insert the mechanical key, rotate it and pull the handle down to unlock.

⇒ **Indoor Unit :** Pull down the indoor unit handle to unlock and open the door from the inside.

B: Passage Mode:

⇒ The door remains unlocked and can be opened freely. To lock it, you must switch back to Auto-Lock Mode via the App.

5.5 Passage Mode (Remain Unlocked Mode)

⚠ Caution: When the lock is in Passage Mode, everyone can open the lock by pressing the handle. The door remains unlocked.

How to Enable Passage Mode:

Locally Enable: Press and hold the Passage Mode button on the indoor unit for 3 seconds. A voice prompt will confirm: "*The lock has been set to remain unlocked*".

Enable via App: Open the Hafele Smart Living App. Go to "**More**", then toggle the "**Auto Lock**" button to **OFF**; this will disable the auto-lock function and switch the lock to **Passage Mode**.

How to Disable Passage Mode:

Locally Disable: Press and hold the Passage Mode button on the indoor unit for 3 seconds. A voice prompt will confirm: "*The lock has been set to locked*".

Disable via App: Open the Hafele Smart Living App. Go to "**More**", then toggle the "**Auto Lock**" button to **ON**; this will reactivate the auto-lock function and exit **Passage Mode**.

ⓘ Note: When someone tries to unlock, there is a voice prompt "*The lock has been set to remain unlocked*".

6. Service Features

6.1 Emergency Power Supply

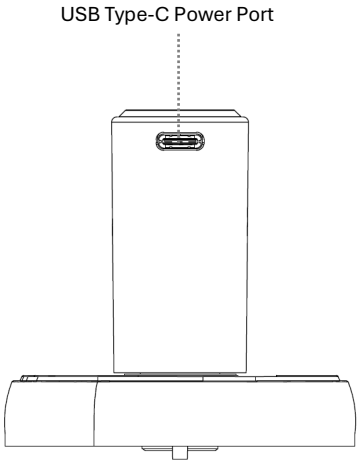

Emergency Power Supply

If the batteries are completely discharged and the lock is without power, follow these steps to recover normal operation:

1. Connect a 5V power supply to the USB-C port on the outdoor unit, wait 5s for the lock to startup and unlock the door.

2. Follow the battery replacement instructions to replace all batteries.

Note: The USB-C port provides temporary power only and does not recharge the batteries; please replace all batteries immediately once inside to ensure continuous operation.

6.2 Battery Replacement Instructions

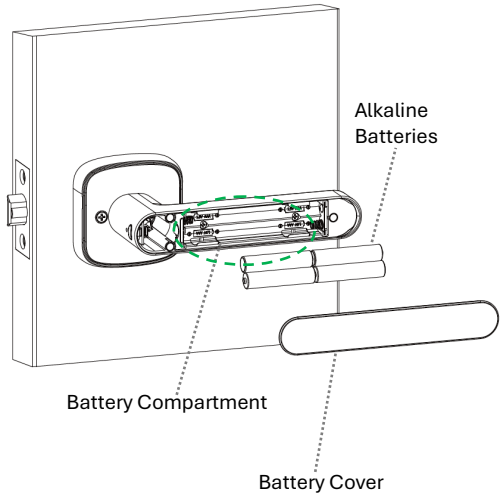

Battery Replacement

When the system indicates a low battery, please follow these steps to replace the batteries:

1. Gently lift and remove the battery cover located on the indoor unit.

2. Replace the old batteries with a new set of 4 x AAA alkaline batteries, then reinstall the battery cover.

Note: Always replace all 4 batteries at the same time. Do not mix old and new batteries or different brands.

6. Service Features

6.3 Restore Factory Settings

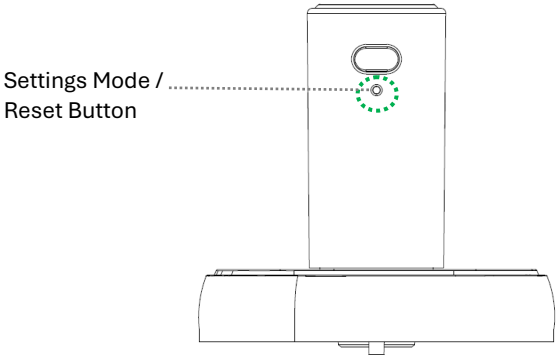

Restore Factory Settings

Perform this procedure if you forget the Administrator password/fingerprint, or if you wish to restart the entire lock system:

1. Use a paperclip to press and hold the Settings Mode Button. (Voice prompt: "*Keep pressing to reset the lock.*")

2. Continue holding the Settings Mode Button. (Voice prompt: "*Preparing to reset the lock*.")

3. Release the Settings Mode Button.

4. The lock has been restored to factory settings. (Voice prompt: "*Door lock reset.*")

⚠ Important: This action will permanently delete all registered users, App pairing information, and system settings.

6. Service Features

6.4 Troubleshooting Guide

Problem Description	Possible Solution	Reference Page
Door lock has no power.	1.Make sure all batteries are installed properly. 2.Replace all 4 x AAA alkaline batteries. 3.Check for battery leakage.	Page 24 - 6.2
Password entered or fingerprint scanned, but the door does not open.	1.Make sure the touchscreen keypad / sensor and your fingers are clean and dry before using. 2.When a low battery warning appears, connect an external emergency power source and attempt the operation again. 3.If non of above solutions are not working, please contact Hafele service center.	Page 24 - 6.1
The lock is completely dead.	1.Connect a 5V Power Supply to the USB Type-C port to provide temporary power for unlocking. 2.Use the Mechanical Key to unlock the door manually.	Page 24 - 6.1 Page 23 - 5.4
The door remain unlocked after closing.	1.The lock may be in Passage Mode. 2.Make sure auto-lock mode is activated. 3.You can check the lock status in the App settings.	Page 17 - 4.4
Cannot connect Bluetooth to the Hafele Smart Living App.	1.Make sure Bluetooth is enabled on your smartphone.	Page 16 - 4.3